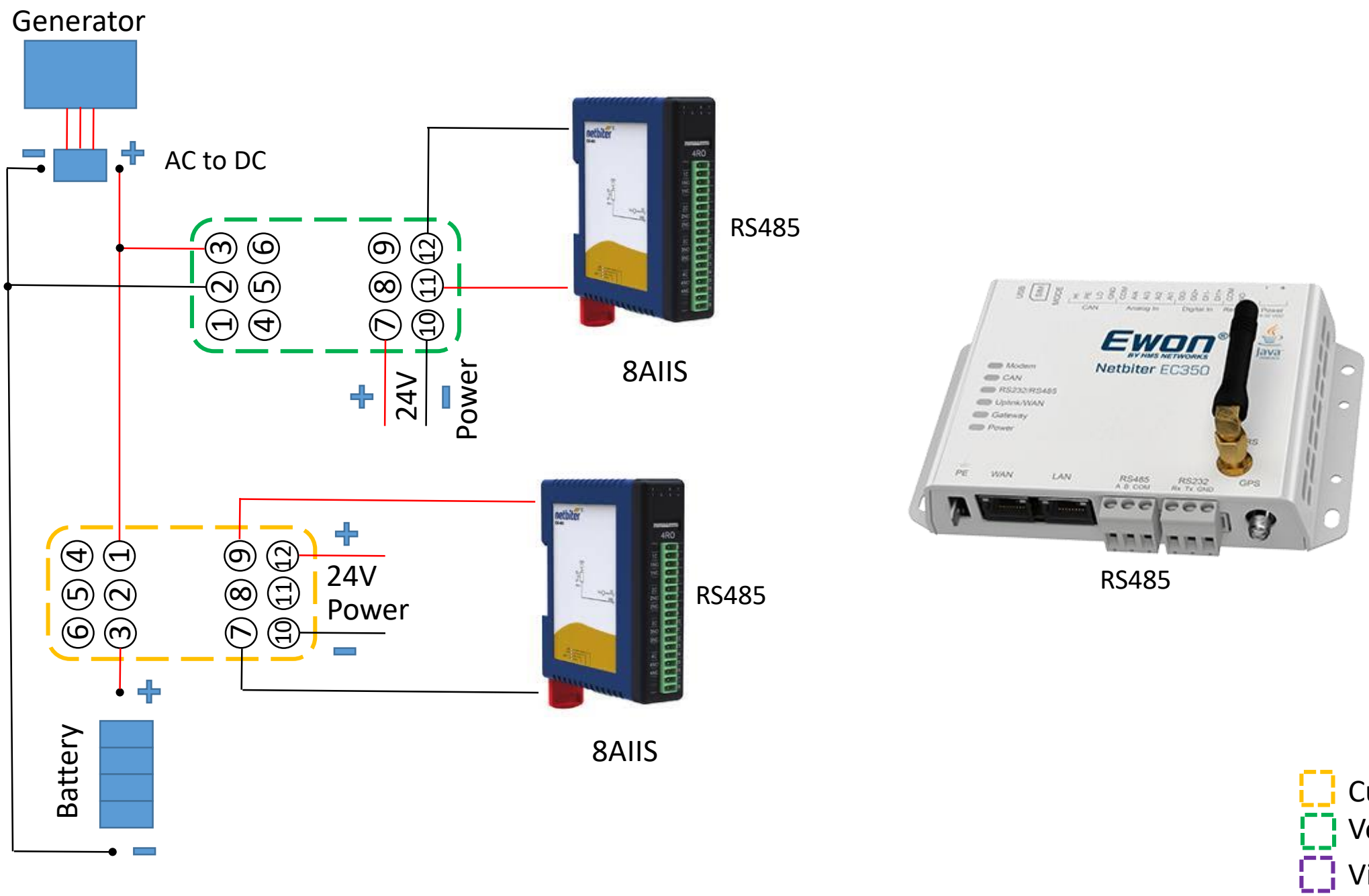
Generator
AC to DC
RS485
8AIIS
24V
Power
24V
Power
RS485
8AIIS
Battery
Ewon
Netbiter EC350
RS485
Current sensor
Voltage sensor
Vibration sensor

Sensor connection to I/O Extenders

8AIIS

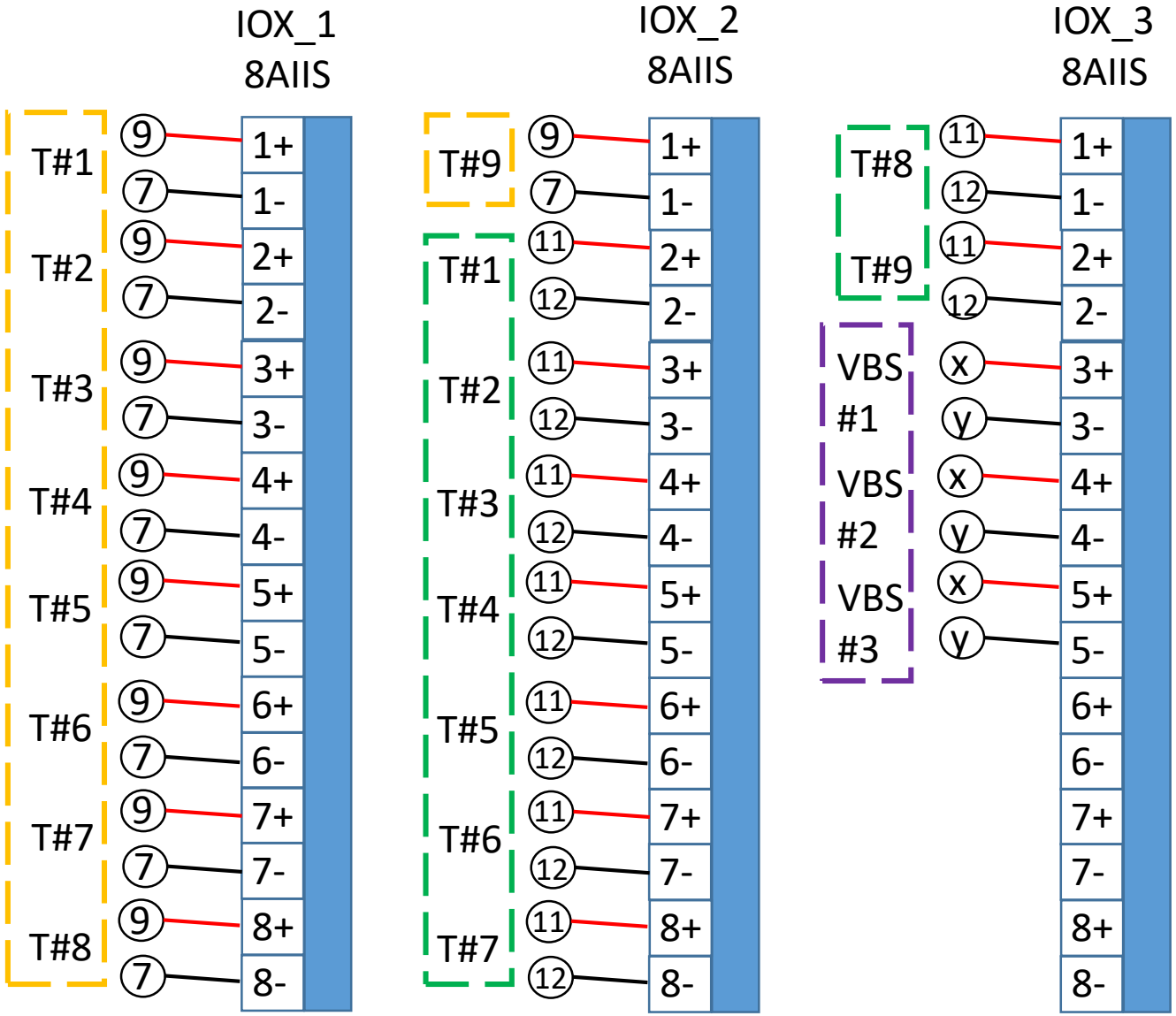

Current sensor
Voltage sensor
Vibration sensor
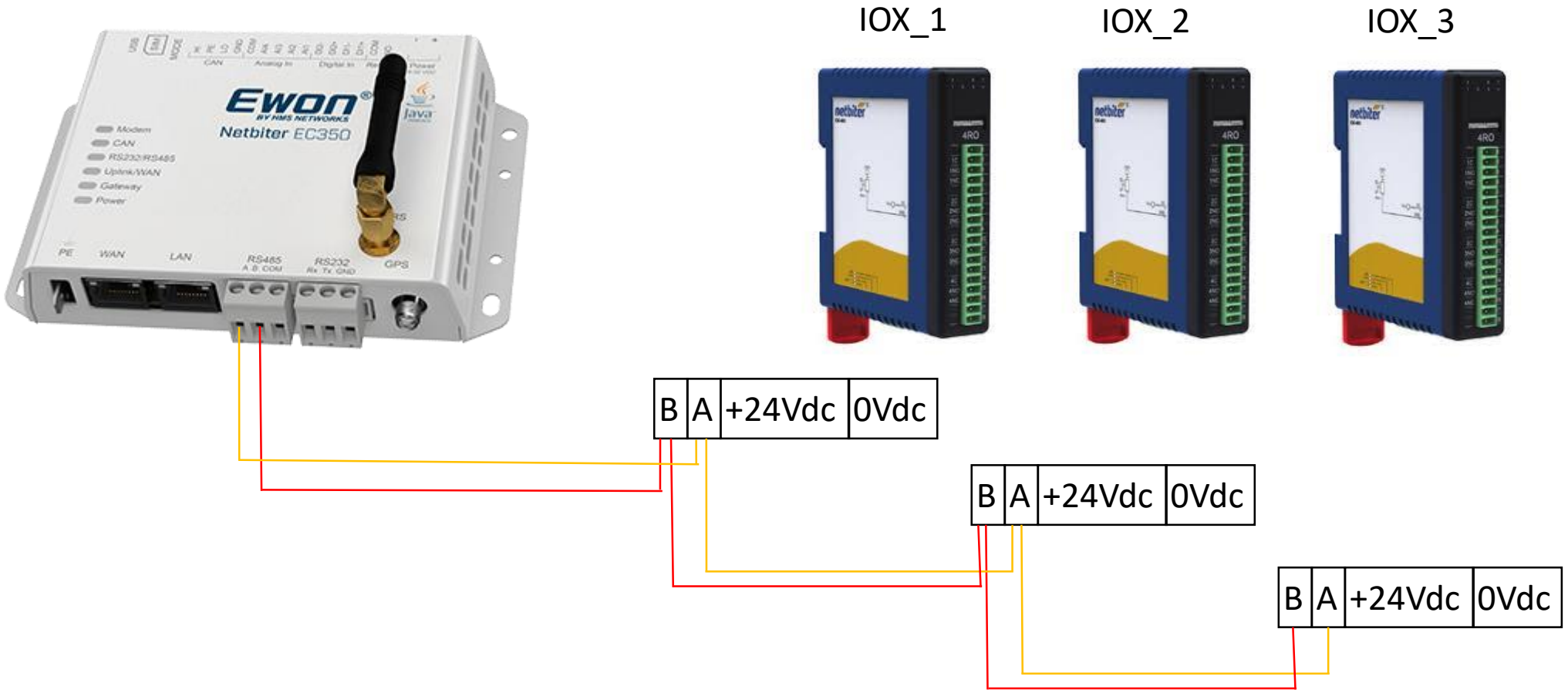
I/O Extenders connection to Netbiter